# COMBINED PRESSURE & TEMPERATURE TRANSMITTER

## BTT 22S Series

"–40…+150°C Temperature Measuring Range, 6…1000Bar Pressure Measuring Range, Analog Output"

- Simultaneous pressure and temperature measurement with a single sensor
- Completely welded thin–film steel diaphragm structure that does not require o–ring
- Pressure measuring range options from 0…6bar to 0…1000bar (optional others)
- –40…+150°C temperature measurement (optional others)
- 0–20mA, 4–20mA, 0–10V, 0.5–4.5V Ratiometric, PT100, PT1000 output options
- G1/4, G1/2, NPT1/4, NPT1/2, M14x1 process connection options
- Stainless steel housing
- EMC and reverse polarity protection
- High accuracy and stability
- Excellent long–term operation

BTT 22S series combined pressure and temperature sensors provide simultaneous measurement of pressure and temperature in liquid and gaseous media via a single compact sensor, eliminating the need for 2 different sensors.

For reliable and accurate measurements, the sensor uses thin–film MEMS technology for pressure sensing as well as RTD for temperature sensing. Measurement values taken from sensors are converted into various analog output signals (4–20mA, 0–10V, etc.) and integrated into automation systems.

BTT 22S series, which is not affected by electrical fluctuations and reverse connections thanks to overvoltage and reverse polarity protection, has a long life. With its fully welded thin–film steel diaphragm structure that does not require O–rings, it is resistant to vibrations and is ideal for use in difficult areas such as chemical applications.

It has a wide range of user–selectable options such as measurement range, mechanical connection type, output signal, electrical connection type.

## APPLICATIONS

- Industrial Machines
- Cooling and HVAC
- Hydraulic and Pneumatic
- Energy Facilities
- Automotive
- Compressors and pumps
- Test Benches
- Defense and aviation
- Rail systems

## MECHANICAL DIMENSIONS (mm)

### M12 CONNECTOR

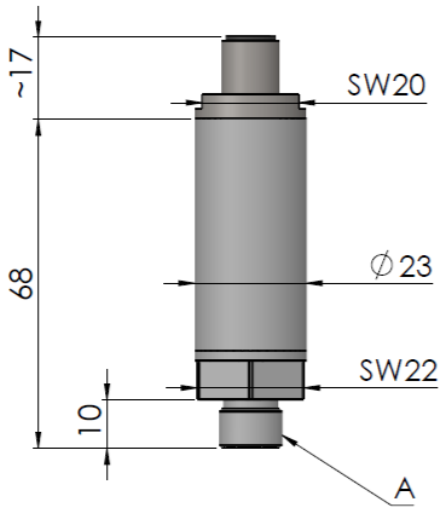


### CABLE

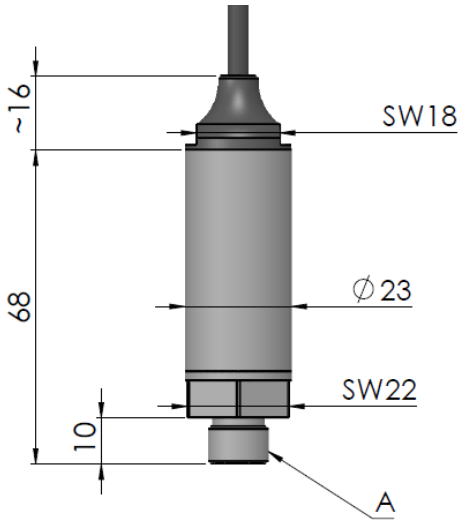


### PROCESS CONNECTION (A)

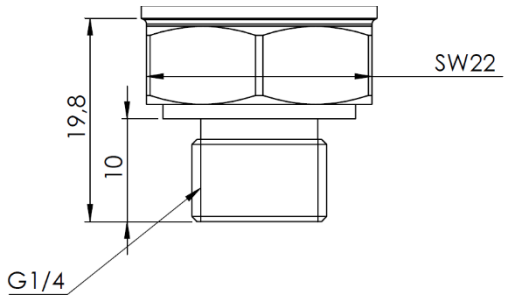


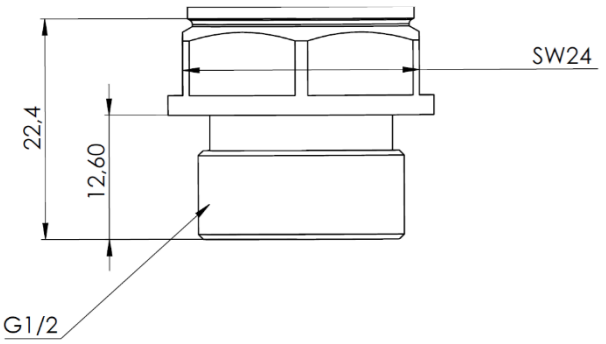


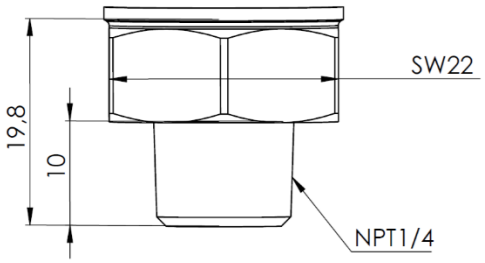


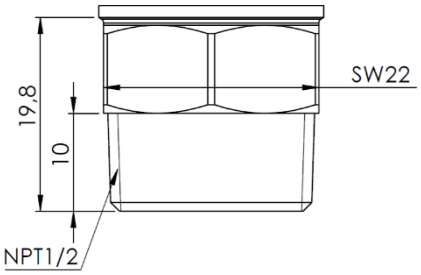


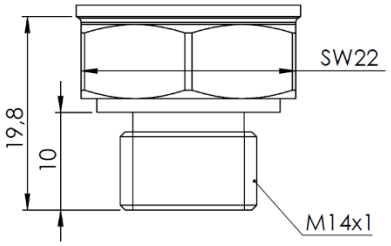


* In the case of the G1/2 model, the dimension of key slot is 24mm. All other models are 22mm.

** Do not turn the product by holding from socket during installation. Otherwise, the product may be damaged.

## TECHANICAL FEATURES

| | Pressure | Temperature |
|---|---|---|
| **Measuring Sensor** | Thin-filmMEMS Sensor | PT100 (Class B EN60751) |
| **Measuring Range** | 6,10,16,25,40,100,250,400,600 and 1000 bar | -40…+150°C(optional others) |
| **Over Pressure** | %300FS <1000Bar,%150FS ≥1000Bar | - |
| **Burst Pressure** | %500FS (Max. 4000 bar) | - |
| **Response Time** | 25ms (standard) %10…%90 nominal pressure<br>1ms, 5ms, 125ms (optional) | 1sn |
| **Accuracy** | ±0.5%FS(@0°C ~ 70°C) | ±%0.5FS (@0°C ~ 70°C) |
| **Long Term Stability** | ≤±%0.1FS/ year | - |
| **Zero temperature drift** | ±%0.03FS/°C | - |
| **Full scale temperature drift** | ±%0.03FS/°C | - |
| **Output Type(*)**<br><br>*There are 2 separate outputs for Pressure and Temperature on the sensor. Output types must be selected in accordance with the horizontal table on the side. For example, if the pressure output is selected as 0-10V;temperature output can be selected as 0-10V, PT100 or PT1000. | **Pressure** | **Temperature** |
| | 2 wire 4-20mA | 2 wire 4-20mA,PT100, PT1000 |
| | 3 wire 4-20mA | 3 wire 4-20mA,PT100, PT1000 |
| | 3 wire0-20mA | 3 wire0-20mA, PT100, PT1000 |
| | 0-10V | 0-10V, PT100, PT1000 |
| | 0.5-4.5VRatiometric | 0.5-4.5VRatiometric, PT100, PT1000 |
| **Supply Voltage** | 2 wire : 8-32VDC<br>3 wire : 12-30VDC | 2 wire : 8-32VDC<br>3 wire : 12-30VDC |
| **Current Consumption** | 2 wire : ≤20mA@24VDC<br>3 wire : <30mA@24VDC | 2 wire : ≤20mA@24VDC<br>3 wire : <30mA@24VDC |
| **Reverse polarity protection** | Yes | |
| **Short circuit protection** | Yes | |
| **Overload protection** | Yes | |
| **Electrical connection** | M12 connector or cable | |
| **Mechanical connection (A)** | G1/4, G1/2, NPT1/4, NPT1/2, M14x1 | |
| **Mounting Torque** | 15 ... 20 Nm | |
| **Material** | Body: 304Lstainless steel<br>Diaphragm: 316Lstainless steel<br>Process connection: 316Lstainless steel | |
| **Operating Temperature** | -10℃…+70℃ | |
| **Storage Temperature** | -40℃…+85℃ | |
| **Protection** | IP65 or IP67<br>*IP67 protection is provided if M12 connector models are equipped with press-printedconnectors. | |

# ELECTRICAL CONNECTIONS

## ANALOG PRESSURE OUTPUT +ANALOG TEMPERATURE OUTPUT

**3 Wire 0–10V,0.5–4.5V Ratiometric, 4–20mA,0–20mA (Pressure and Temperature) Connection**

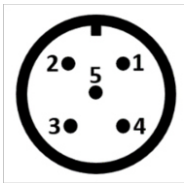

| Cable | M12 5 pin male connector | Signal |
|---|---|---|
| Red | 1 | +12...30VDC (Supply) |
| Yellow | 2 | 0–10V,0.5–4.5VRatiometric, 4–20mA,0–20mA(Pressure) |
| Black | 3 | GND |
| Green | 4 | 0–10V,0.5–4.5VRatiometric, 4–20mA, 0–20mA(Temp.) |
| Pink | 5 | N/C |

**2 Wire 4–20mA(Pressure and Temperature) Connection**

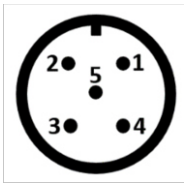

| Cable | M12 5 pin male connector | Signal |
|---|---|---|
| Red | 1 | +8...32VDC (Supply) |
| Yellow | 2 | 4–20mA(Pressure) |
| Black | 3 | N/C |
| Green | 4 | 4–20mA(Temp.) |
| Pink | 5 | N/C |

## ANALOG PRESSURE OUTPUT +RTD TEMPERATURE OUTPUT

**3 Wire 0–10V,0.5–4.5V Ratiometric, 4–20mA,0–20mA (Pressure) and PT100,PT1000(Temperature) Connection**

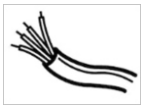
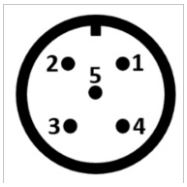

| Cable | M12 5 pin male connector | Signal |
|---|---|---|
| Red | 1 | +12...30VDC (Supply) |
| Yellow | 2 | 0–10V,0.5–4.5VRatiometric, 4–20mA,0–20mA(Pressure) |
| Black | 3 | GND |
| Green | 4 | PT100, PT1000 (Temp.) |
| Pink | 5 | PT100, PT1000 (Temp.) |

**2 Wire 4–20mA(Pressure) and PT100, PT1000(Temperature) Connection**

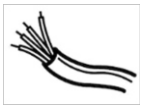
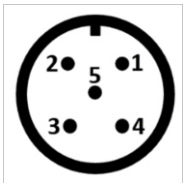

| Cable | M12 5 pin male connector | Signal |
|---|---|---|
| Red | 1 | +8...32VDC (Supply) |
| Yellow | 2 | 4–20mA(Pressure) |
| Black | 3 | N/C |
| Green | 4 | PT100, PT1000 (Temp.) |
| Pink | 5 | PT100, PT1000 (Temp.) |

# PRESSURE RANGE SELECTION

| Code | Pressure Range | Overpressure | Burst Pressure |
|---|---|---|---|
| 6Bar | 0 ~ 6Bar | %300FS | %500FS |
| 10Bar | 0 ~ 10 Bar | %300FS | %500FS |
| 16Bar | 0 ~ 16Bar | %300FS | %500FS |
| 25Bar | 0 ~ 25Bar | %300FS | %500FS |
| 40Bar | 0 ~ 40Bar | %300FS | %500FS |
| 100Bar | 0 ~ 100Bar | %300FS | %500FS |
| 250Bar | 0 ~ 250Bar | %300FS | %500FS |
| 400Bar | 0 ~ 400Bar | %300FS | %500FS |
| 600Bar | 0 ~ 600Bar | %300FS | %500FS |
| 1000Bar | 0 ~ 1000Bar | %150FS | %500FS |

## OUTPUT SIGNAL SELECTION

| | Pressure | Temperature |
|---|---|---|
| Output Type (*) | 2 wire 4–20mA | 2 wire 4–20mA,PT100, PT1000 |
| | 3 wire 4–20mA | 3 wire 4–20mA,PT100, PT1000 |
| | 3 wire0–20mA | 3 wire0–20mA, PT100, PT1000 |
| | 0–10V | 0–10V,PT100, PT1000 |
| | 0.5–4.5VRatiometric | 0.5–4.5VRatiometric, PT100, PT1000 |

***There are 2 separate outputs for Pressure and Temperature on the sensor. Output types must be selected in accordance with the horizontal table above.**
For example, if the pressure output is selected as 0–10V;temperature output can be selected as 0–10Vor PT100 or PT1000.
For example, if the pressure output is selected as 2–wire 4–20mA;temperature output can be selected as 2–wire 4–20mAor PT100 or PT1000.

## ORDER CODE

### 1–Model
BTT 22S

### 2–Temperature Range
–40…+150°C standard (Ask for others)

### 3–Pressure Range
6, 10, 16, 25, 40, 100, 250, 400, 600, 1000 bar (Ask for others)

### 4–Temperature Output Signal

| | | |
|---|---|---|
| A : 4–20mA (2–wire) | V : 0–10VDC | PT100 |
| A0 : 0–20mA(3–wire) | V8 : 0.5–4.5VDCRatiometric | PT1000 |
| A7 : 4–20mA(3–wire) | | |

***There are 2 separate outputs for pressure and temperature. Output signals must be selected in accordance with the output signal selection table above (page 5).**

### 5–Pressure Output Signal

| | |
|---|---|
| A : 4–20mA (2–wire) | V : 0–10VDC |
| A0 : 0–20mA(3–wire) | V8 : 0.5–4.5VDCRatiometric |
| A7 : 4–20mA(3–wire) | |

***There are 2 separate outputs for pressure and temperature. Output signals must be selected in accordance with the output signal selection table above (page 5).**

### 6–Process Connection

| | | |
|---|---|---|
| G1/4 : G1/4 | NPT1/4 : NPT1/4 | M14 : M14x1 |
| G1/2 : G1/2 | NPT1/2 : NPT1/2 | |

* Optional others

### 7–Electrical Connection

| | |
|---|---|
| S165 : M12 5 pin male (std) | 1M : 1 meters cable |

* Optional others

### 8–Body Material
E304 : 304L
* Optional others

**Sample order code 1:** BTT 22S –40…+150250BarV V G1/4 S165 E304
BTT 22S series, –40…+150°Ctemperaturemeasurement, 250Bar pressure measurement, 0–10Vtemperature output, 0–10Vpressure output, G1/4 process connection, M12 5 pin male connector, 304L body
**Sample order code 2:** BTT 22S –40…+150100BarPT100 V G1/2 S165 E304
BTT 22S series, –40…+150°Ctemperaturemeasurement, 100Bar pressure measurement, PT100 temperature output, 0–10Vpressure output, G1/2 process connection, M12 5 pin male connector, 304L body